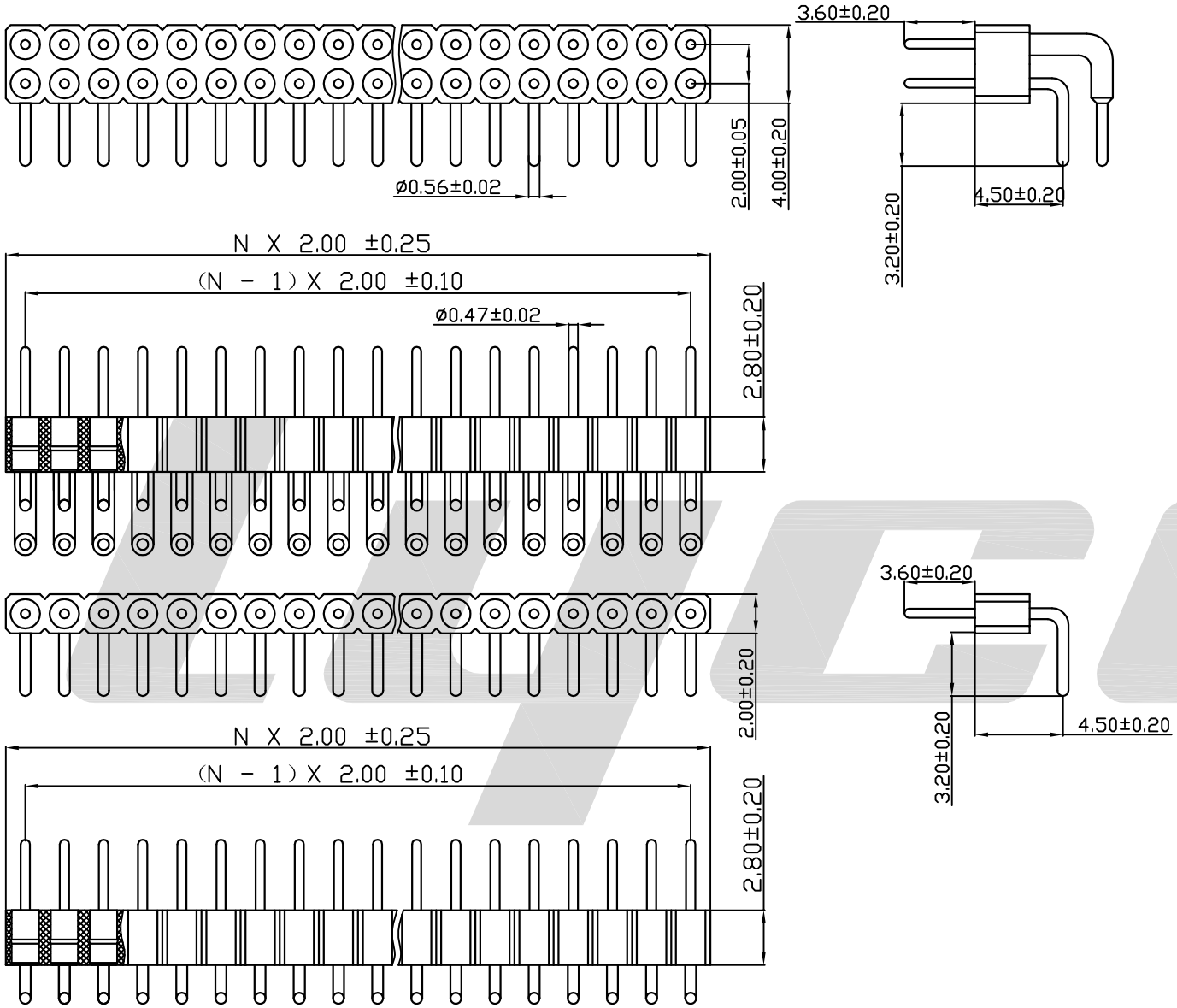

SPECIFICATIONS:

Current Rating: 2.0 AMP
Contact Resistance: 10mΩ Max
Insulation Resistance: 1000MΩ Min
Withstand Voltage: 600V AC/minute
Operation Temperature: -40°C to +105°C

MATERIALS:

Contact Material: Brass(H59-3)
Contact Plating: Gold or Tin over 50u" Ni
Insulator Material: Polyester(UL94V-0)

Ordering Code

①	②	③	④	⑤	⑥	⑦	⑧	⑨
132	XX	X	X	2	X	XXXX	R	2

① Series No.:
132=2.00 Pitch

② Number of Contacts:
01 Pin~80 Pin

③ Dip Spacing:
1=Single row
2=Double row

④ Material Type:
1=PPS
2=PBT

⑤ Insulator Height:
2=2.8mm

⑥ Contact Plated
1=Gold flash
2=Gold 3u"
3=Gold 5u"
4=Gold 10u"
5=Gold 15u"
6=Gold 30u"
7=Tin 200u"

⑦ Pin Length:
L=XXXX

⑧ Tial & Mounting Style:
S=Straight DIP Type
R=Right Angle DIP Type
M=Straight SMT Type

⑨ 1=SIP Socket
2=Pin Connectors

REV	ZONE	LTR	DESCRIPTION.	ECN.NO.	Date
E					
D					
C					
B					
A			RELEASED		19/05-10

Units	mm	Scale	3:1
Tolerance Unless Otherwise Specified			
.X ~ ±0.30			
.XX ~ ±0.25			
.XXX ~ ±0.20			
Angle ~ ± 3°			

Drawing By Date
Check By Date
Approval By Date

lycn® 深圳市联益电子有限公司
HTTP：//WWW.LYCONN.COM

Date	2010/05/19	Title	2.0x2.8双头针座90度系列
Sheet	1 of 1		
Thirt Angle Projection		Drawing No.	STZZ-28-1210-092
		File Path	M/F/MA/GCTZ/STZZ
		REV	A