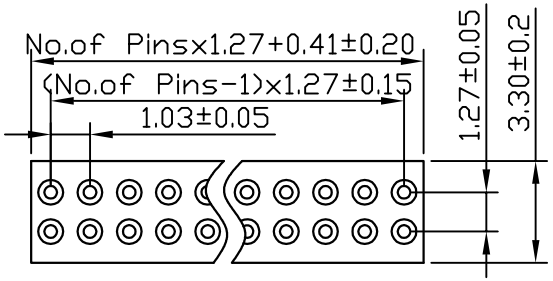

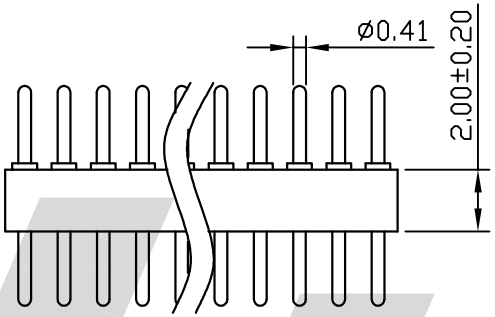

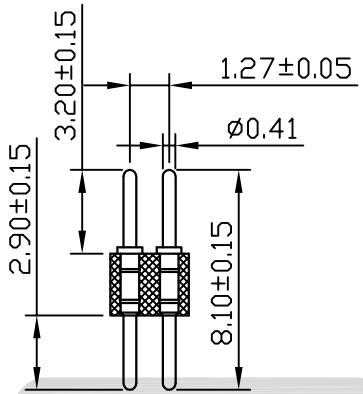

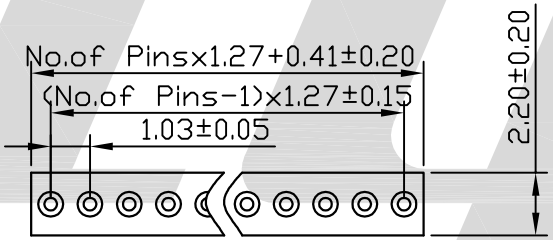

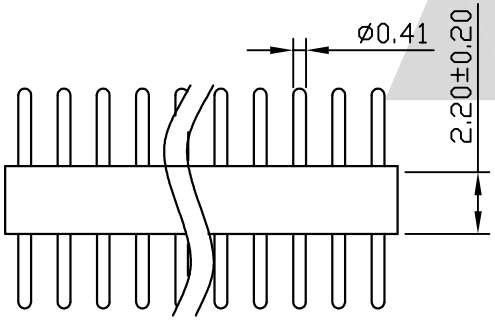

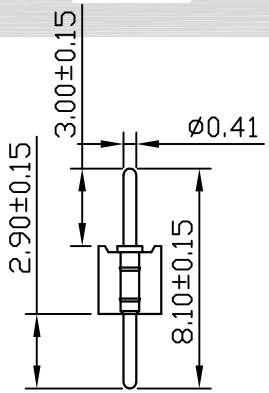

SPECIFICATIONS:

Current Rating: 1.0 AMP
Contact Resistance: 10mΩ Max
Insulation Resistance: 1000MΩ Min
Withstand Voltage: 600V AC/minute
Operation Temperature: -40°C to +105°C

MATERIALS:

Contact Material: Brass(H59-3)
Contact Plating: Gold or Tin over 50u" Ni
Insulator Material: Polyester(UL94V-0)

Ordering Code

①	②	③	④	⑤	⑥	⑦	⑧	⑨
133	XX	X	X	X	X	XXXX	S	2

① Series No. :
133=1.27 Pitch

② Number of Contacts:
01 Pin~100 Pin

③ Dip Spacing:
1=Single row
2=Double row

④ Material Type:
1=PPS/White
2=PPS/Black

⑤ Insulator Height:
1=2.0mm
2=2.2mm

⑥ Contact Plated
1=Gold flash
2=Gold 3u"
3=Gold 5u"
4=Gold 10u"
5=Gold 15u"
6=Gold 30u"
7=Tin 200u"

⑦ Pin Length:
L=XXXX

⑧ Tial & Mounting Style:
S=Straight DIP Type
R=Right Angle DIP Type
M=Straight SMT Type

⑨ 1=SIP Socket
2=Pin Connectors

REV	ZONE	LTR	DESCRIPTION.	ECN.NO.	Date
E					
D					
C					
B					
A			RELEASED		03/09-07

Units	mm	Scale	5:1
Tolerance Unless Otherwise Specified			
.X ~ ±0.30			
.XX ~ ±0.25			
.XXX ~ ±0.20			
Angle ~ ± 3°			

Drawing By Date
Check By Date
Approval By Date

深圳市联益电子有限公司
HTTP：//WWW.LYCONN.COM

Date	2007/09/03	Title	1.27mm双头针座180°系列
Sheet	1 of 1		
Thirt Angle Projection		Drawing No.	STX4-S-XXXX-123
		File Path	REV A